TONE

TORQUE/ANGLE WRENCH

TO BE PRESERVED

INSTRUCTION MANUAL

No.2610

⚠WARNING

- Read and fully understand all the instructions before use.
- Keep this manual in designated place for easy and quick reference.
- The models mentioned on this manual are designed for use outside Japan.
  Warranty shall be void if above mentioned models are use in Japan.

Thank you for purchasing our product.

■Upon receipt, check and confirm the following:
- Check any transport damages.
- Check for any loose or lost screws and bolts.
- Check the model as per order.
- Check all the accessories are contained.

If any problems are found, contact your distributor.

■Read this instruction manual carefully before use.
Full understanding of manual is essential to prevent personal injury or malfunction.

■If the manual or warning label is lost or becomes illegible,
or if an additional manual is required,
please contact the distributor where you purchased the product.

If you have any questions about the products or the contents of this instruction manual, contact your distributor.

TONE CO., LTD.

CONTENTS

APPLICATION 3
PARTS NAME 3
SAFETY INSTRUCTION 4
GENERAL POWER TOOL SAFETY WARNINGS 5
⚠ PRECAUTIONS FOR USE 8
BEFORE USE 18
CHANGING ACCESSORIES -SOCKETS- 19
OPERATING PROCEDURE 22
METHOD OF ANGLE SETTING 28
INSPECTION & MAINTENANCE 30
EXPLANATION ON LED INDICATION 32
NOISES AND VIBRATION 33
AFTER SALES SERVICE 36

APPLICATION

■TORQUE/ANGLE WRENCH is an electric tool for snug and angle tightening TNA Bolt/Nut/Washer assemblies.

PARTS NAME

Part Name

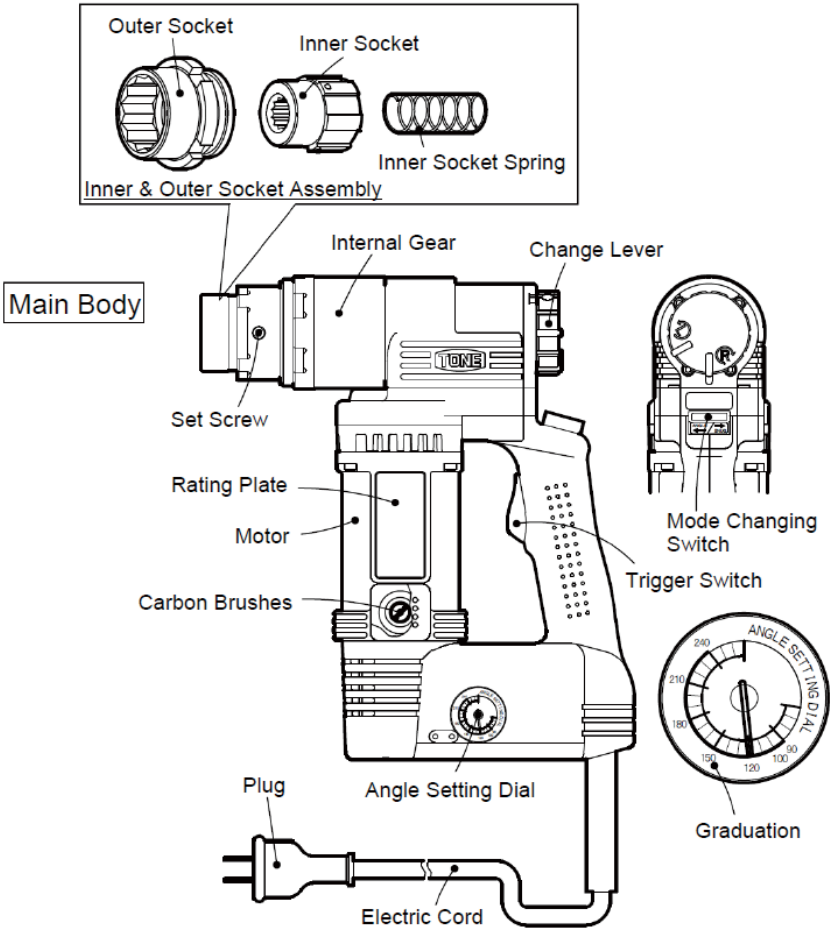

SAFETY INSTRUCTION

This manual specifies three (3) basic safety instructions:

DANGER | WARNING | CAUTION

■Instructions are classified by the degree of risk and described as follows:

DANGER	Danger is used to indicating threatening dangerous or unsafe practices that could immediately result in severe personal injury or death in the worst case.
WARNING	Warning is used to indicating hazardous or unsafe practices that could result in severe personal injury or death on the worst occasion.
CAUTION	Caution is used to indicate hazardous or unsafe practices that could result in personal injury or product or property damage.

Even if the risk is classified as CAUTION , the risk could become a more serious result depending on conditions. Make sure to follow all instructions when using.

GENERAL POWER TOOL SAFETY WARNINGS

⚠WARNING

Read all safety warnings, instructions, illustrations and specifications provided with this power tool. *Failure to follow all instructions listed below may result in electric shock, fire and/or serious injury.*
Save all warnings and instructions for future reference.
The term " power tool" in the warnings refers to your mains-operated (corded) power tool or battery-operated(cordless)power tool.

1) Work area safety

a) **Keep work area clean and well lit.** *Cluttered or dark areas invite accidents.*

b) **Do not operate power tools in explosive atmospheres, such as in the presence of flammable liquids, gases or dust.** *Power tools create sparks which may ignite the dust or fumes.*

c) **Keep children and bystanders away while operating a power tool.** *Distractions can cause you to lose control.*

2) Electrical safety

a) **Power tool plugs must match the outlet. Never modify the plug in any way. Do not use any adapter plugs with earthed (grounded) power tools.** *Unmodified plugs and matching outlets will reduce risk of electric shock.*

b) **Avoid body contact with earthed or grounded surfaces, such as pipes, radiators, ranges and refrigerators.** *There is an increased risk of electric shock if your body is earthed or grounded.*

c) **Do not expose power tools to rain or wet conditions.** *Water entering a power tool will increase the risk of electric shock.*

d) **Do not abuse the cord. Never use the cord for carrying, pulling or unplugging the power tool. Keep cord away from heat, oil, sharp edges or moving parts.** *Damaged or entangled cords increase the risk of electric shock.*

e) **When operating a power tool outdoors, use an extension cord suitable for outdoor use**. *Use of a cord suitable for outdoor use reduces the risk of electric shock.*

f) **If operating a power tool in a damp location is unavoidable, use a residual current device (RCD) protected supply.** *Use of an RCD reduces the risk of electric shock.*

3) Personal safety

a) **Stay alert, watch what you are doing and use common sense when operating a power tool. Do not use a power tool while you are tired or under the influence of drugs, alcohol or medication.** *A moment of inattention while operating power tools may result in serious personal injury.*

b) **Use personal protective equipment. Always wear eye protection.** *Protective equipment such as a dust mask, non-skid safety shoes, hard hat for appropriate conditions will reduce personal injuries.*

c) **Prevent unintentional starting. Ensure the switch is in the off-position before connecting to power source and/or battery pack, picking up or carrying the tool.** *Carrying power tools with your finger on the switch or energising power tools that have the switch on invites accidents.*

d) **Remove any adjusting key or wrench before turning the power tool on.** *A wrench or a key left attached to a rotating part of the power tool may result in personal injury.*

e) **Do not overreach. Keep proper footing and balance at all times.** *This enables better control of the power tool in unexpected situations.*

f) **Dress properly. Do not wear loose clothing or jewellery. Keep your hair and clothing away from moving parts.** *Loose clothes, jewellery or long hair can be caught in moving parts.*

g) **If devices are provided for the connection of dust extraction and collection facilities, ensure these are connected and properly used.** *Use of dust collection can reduce dust-related hazards.*

h) **Do not let familiarity gained from frequent use of tools allow you to become complacent and ignore tool safety principles.** *A careless action can cause severe injury within a fraction of a second.*

4) Power tool use and care

a) **Do not force the power tool. Use the correct power tool for your application.** *The correct power tool will do the job better and safer at the rate for which it was designed.*

b) **Do not use the power tool if the switch does not turn it on and off.** *Any power tool that cannot be controlled with the switch is dangerous and must be repaired.*

c) **Disconnect the plug from the power source and/or remove the battery pack, if detachable, from the power tool before making any adjustments, changing accessories, or storing power tools**. *Such preventive safety measures reduce the risk of starting the power tool accidentally.*

d) **Store idle power tools out of the reach of children and do not allow persons unfamiliar with the power tool or these instructions to operate the power tool.** *Power tools are dangerous in the hands of untrained users.*

e) **Maintain power tools and accessories. Check for misalignment or binding of moving parts, breakage of parts and any other condition that may affect the power tool' s operation. If damaged, have the power tool repaired before use.** *Many accidents are caused by poorly maintained power tools.*

f) **Keep cutting tools sharp and clean.** *Properly maintained cutting tools with sharp cutting edges are less likely to bind and are easier to control.*

g) **Use the power tool, accessories and tool bits etc. in accordance with these instructions, taking into account the working conditions and the work to be performed.** *Use of the power tool for operations different from those intended could result in a hazardous situation.*

h) **Keep handles and grasping surfaces dry, clean and free from oil and grease.** *Slippery handles and grasping surfaces do not allow for safe handling and control of the tool in unexpected situations.*

6) Service

a) **Have your power tool serviced by a qualified repair person using only identical replacement parts.** *This will ensure that the safety of the power tool is maintained.*

7) Hold the power tool by insulated gripping surfaces, when performing an operation where the fastener may contact hidden wiring or its own cord. *Fasteners contacting a "live" wire may make exposed metal parts of the power tool "live" and could give the operator an electric shock.*

⚠ PRECAUTIONS FOR USE

■ To prevent accidents, personal injury and etc,
read and follow all instructions listed below.

⚠ DANGER

● **Beware of electric shock when operating at high place.**
Failure to follow this instruction may result in fall down accidents.

⚠WARNING

● Beware of electric shock.

○ Never use the wrench under rainy or snowy condition.

○ Never touch the plug with wet hands.

Failure to follow this instruction may result in electric shock, fire or electric leakage.

● Electric cord must be regularly inspected.

○ Stop using the wrench if there is a problem with the electric cord.

○ Contact your distributor for repair.

Failure to follow this instruction may result in electric shock or electric leakage.

● Beware of fall down accidents when working at a high place.

○ Wear safety belt

○ Provide safety net or canvas as safe guarding against falling items.

○ Confirm that no one is underneath the working site before operation.

○ Stop operation when physically or mentally tired.

Failure to follow these instructions may result in fall down accidents.

● Avoid overloading.

○ Use the wrench and its accessories within the rated specifications.

Overloaded wrench and its accessories may result in malfunction of the wrenches, accidents or personal injury.

● Avoid accidental Starting.

○ Ensure that the switch is in the off-position before plugging into power source or carrying the wrench with the storage battery installed.

○ Never carrying the wrench with your fingers on the switch.

● Disconnect the plug from the power source or remove the storage battery from the wrench when:

○ Not in use.

○ Changing accessories.

○ Inspection and maintenance.

○ Or other danger is foreseen.

Failure to follow these instructions may result in accidental starting and personal injury.

● Use appropriate power source as indicated on the rating plate.

Failure to follow this instruction may result in fire or burn accidents.

⚠WARNING

● **Do not disassemble or modify the wrench.**

○ Disassembly or modification made by unauthorized personnel may result in malfunction or personal injury.

○ Disassembly & Re-assembly work is permitted.

● **Store wrench and strage battery, charger in the case and keep it at the designated place when not in use.**

○ Store wrench and storage battery in a lockable dry location to keep any unauthorized personnel away.
Failure to follow this instruction may result in malfunction or accidents.

○ Do not store the wrench or storage battery in a place where the temperature may rise above 50℃
(such as a metal box or a car in the summer).
It may cause deterioration of the storage battery and cause smoke and fire.

○ To prevent condensation, avoid leaving the product in an environment where the temperature is likely to drop below freezing for long periods of time. Store the product in a warm indoor location if possible.
It may cause accidents, malfunctions, poor accuracy, electric shock, fire, or electric leakage.

● **Immediately stop using the wrench and turn off the switch when unusual sound, vibration, or smell is detected.**

○ Contact your distributor immediately.
Failure to follow this instruction may result in serious injury.

● **Contact your distributor for repair service.**

○ Repair work should only be carried out by a qualified technician.
Repair work done by an inexperienced person may cause accidents, injury or malfunction.

● **Check the following items before operation.**

○ Check for any deformation, crack or damage on the wrench body and parts.

○ Do not use the wrench if any problem are found on items.
It may cause electric shock, fire, burns, or injury.

⚠WARNING

● **Immediately check the wrench when it is dropped down or banged.**

○ Check for deformation, crack, damage and other abnormality.
Stop using the wrench if any abnormality is found.
Continued use of fault wrench may result in accidents and personal injury.

● **Consider the surrounding conditions of the work area and storage area.**

○ Do not use, leave, or store the wrench, charger, or battery in the rain or in damp places.
It may result in electric shock.

● **Properly install sockets as described in this manual.**

○ Incomplete installation may result in accidents and personal injury.

⚠WARNING

■ **If you are using a wrench with an earth wire, please also read the warning below.**

● **Check if leakage breaker is available together with earth connection.**

○ Recommended leakage breaker: Rating capacity at 15mA and acting time below 0.1sec

It may cause electric shock, leakage of electricity, or fire.

● **If extension cable is used, apply those with earth and 3-P cable.**

○ One cable must be adapted as earth cord and must be connected to the earth terminal on the tool.

○ 2 core cable without earth cord might cause electric shock.

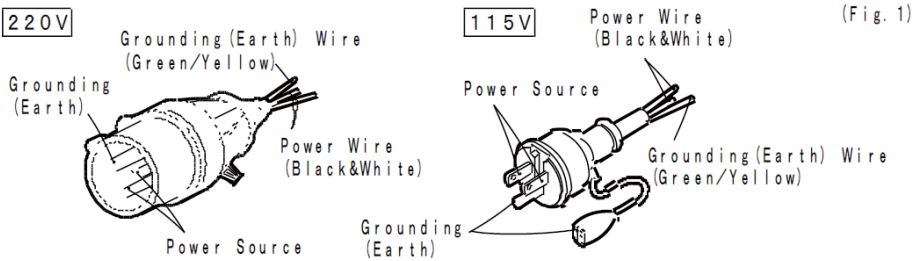

(Fig. 1)

● **Grounding (Earth Connection) is always required.**

○ Supplied tool has no double insulation structure, hence tool must be earthed.

It may cause electric shock, leakage of electricity, or fire.

● **Do not connect grounding (earth) lead to gas pipe**

It may cause explosion or fire.

⚠WARNING

■ **If you are using a double-insulated wrench, please also read the warning below.**

● **Never dismantle power supply plug attached to wrench body.**

○ When using extension cord or in case it is necessary to use power plug of different configuration at work-site, avail attached connector wiring to separate power-cord.

○ In case the cord-plug attached to wrench body is damaged, have it repaired/replaced by your distributor.

○ If for any reason the plug is cut off of the cable of this wrench, it must be disposed of safety and not left unattended.

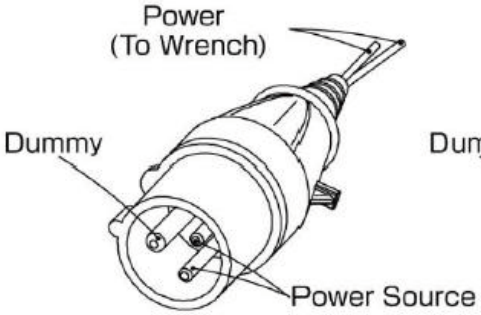

220-230V

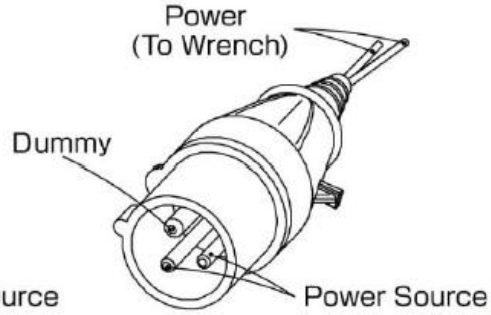

110-120V

⚠CAUTION

● Keep work area clean.

○ Cluttered areas and benches invite accidents.

● Keep children away.

○ Do not let children touch the wrench and electric cord.

○ All visitors should be kept away from work area.

● Secure work area.

○ Keep body stance balanced and firmed.

○ Never wrap the electric cord around something.

○ Work carefully to avoid tripping over the cord.

○ Keep work area well lit.

● Use suitable model for each application.

○ Do not use wrench beyond its rated specifications.

○ Do not use wrench for purpose not intended.

● Dress properly.

○ Always wear gloves and non-skid footwear when operating outdoor.

○ Always wear safety helmet.

● Use genuine accessories from our company.

● Keep electric motor well ventilated.

○ Do not put any foreign materials into the vent.

○ Do not block exhaust vent.

● Maintain wrench.

○ Keep wrench handle clean, dry and free of oil or grease.

● Observe local laws and rules concerning noise level.

⚠CAUTION

● **Use Commercial power supply to operate the wrench.**

● **Do not abuse the electric cord.**

○ Never use the electric cord for carrying, pulling or unplugging the power.

○ Keep the electric cord away from heat, oil, sharp edges or moving parts

● **Do not connect multiple plugs to a single outlet by using a multiple outlet adaptors.**

Over current may cause fire, accidents or malfunction.

● **Provide leakage breaker as a shock guard for each wrench.**

○ Although a double insulated wrench does not require a leakage breaker, use of leakage breaker is strongly recommended as an extra safeguard.

● **When using an extension cord, make sure that voltage remains within +/− 10% of the rated voltage at all times.**

● **When using an extension cord, select shorter extension units than specified below depending on the cross section.**

○ Using an extension cord longer than the Maximum Length listed above may result in a malfunction or breakdown due to performance drop of the wrench.

Nominal conducting cable cross section.		Max. Length	
		110−120 V	220−230 V
H07RN−F	1.5 mm^2	10 m	20 m
	2.5 mm^2	20 m	40 m
	4.0 mm^2	30 m	60 m
AWG 14		50ft	100ft
AWG 12		80ft	160ft
AWG 10		130ft	260ft

● **Use attached connector when using extension cord.**

⚠CAUTION

■ If you use a corded wrench other than a shear wrench, please also read the following precautions.

●Follow the instructions below when using generator.

○ Use 50-60Hz (AC) sinusoidal power supply without high harmonic wave. Power supply including high harmonic wave may cause malfunction or breakage of the wrench.

○ Use high capacity generator. Power requires almost 2kW (2kVA) per one wrench.

○ The operating voltage must remain within +/-10% of the rated voltage at all times.

○ Do not use the slow-down function or eco-mode. (Slow down function: A function that allows the engine to run at a lower speed when the generator is not under load.) *This may cause the electric wrench to malfunction or break down.*

● Do not use welder generators.

○ Welder generators may cause malfunction or breakage of the control base installed in the wrench.

○ Some welder generators may produce electrical noise that may cause the wrench to malfunction.

●Do not use welders along with the wrench.

○ The wrench may malfunction due to extraordinary electrical noise even if the welders are connected to other generators that the wrench is not connected to.

— ⧈ About Double Insulation —

This safety mark is only displayed on electrically safe double-insulated products, so you can use it safely without worrying about electric shock even without grounding.

Replacing parts with non-specified ones or assembling incorrectly will result in the product losing its double-insulation structure, which could result in injury or accidents.

For disassembly/assembly, part replacement, or repairs, please contact the retailer where you purchased the product or our sales office.

⚠CAUTION

● Follow the instructions below when using generator.

○ Use 50-60Hz sinusoidal power supply without high harmonic wave.
Power supply including high harmonic wave may cause malfunction or breakage of the wrench.

○ Use high capacity generator.
Power requires almost 2kW (2kVA) per one wrench.

○ The operating voltage must remain within +/-10% of the rated voltage at all times.

○ Do not use the slow-down function or eco-mode.
Slow down function: A function that allows the engine to run at a lower speed when the generator is not under load.)

This may cause the electric wrench to malfunction or break down.

● Do not use welder generators.

○ Welder generators may cause malfunction or breakage of the control base installed in the wrench.

○ Some welder generators may produce electrical noise that may make the wrench out of control.

● Do not use welders along with the wrench.

○ The wrench may be out of control due to extraordinary electrical noise even if the welders are connected to other generators that the wrench is not connected to.

BEFORE USE

⚠WARNING

● **Check followings before use.**

It may cause injury.

○ Check items

Check for any deformation, crack or damage on wrench body, parts, etc.
Do not use wrench if any problem is found on items.

○ Check the power supply

Use the power supply indicated on the nameplate.

○ Choose Socket

Prepare a socket that matches the size of the bolt/nut you tighten.

○ Install Parts

Parts should be securely installed on the wrench.
Loose installation may result in accidents and personal injury.

CHANGING ACCESSORIES -SOCKETS-

■No.1

○Remove inner & outer socket assembly from wrench by unscrewing set screws. Do not remove the set screws completely from outer socket holder.

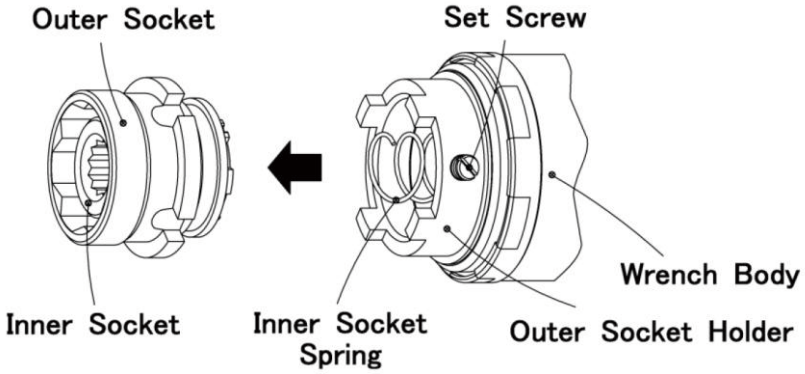

○Remove inner socket from outer socket by pushing projecting pin with using screwdriver or the pintail of bolt.

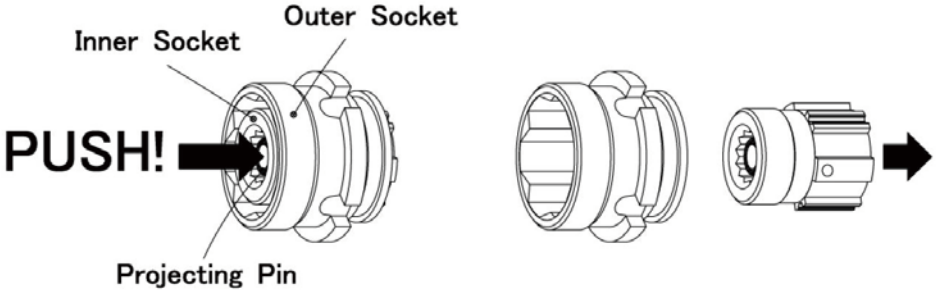

●Projecting pin is a doughnut -shaped pin in the inner socket.

○Select adequate inner & outer socket assembly of the bolts being tightened. i.e. Use TONE genuine M24 inner & outer socket assembly for tightening M24 bolt/nut assembly.

○Place the inner socket vertically then slide the outer socket over the inner socket. Push the projecting pin down by using the pintail of bolt, and the inner & outer socket will be properly assembled.

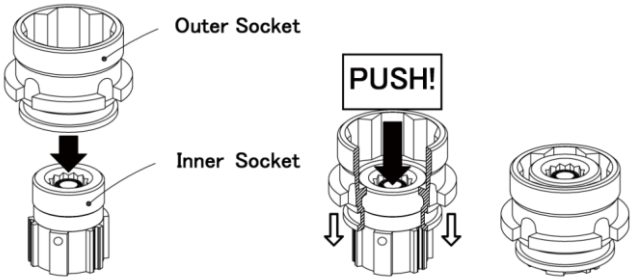

○Make sure that there is a inner socket spring inside the wrench body and then set the inner & outer socket assembly to the wrench body and completely remove the gap between the socket assembly and the wrench body.

The gap can be removed by turning & pushing down the pintail of bolt into the inner socket.
Fasten the set screws only after the gap is completely removed

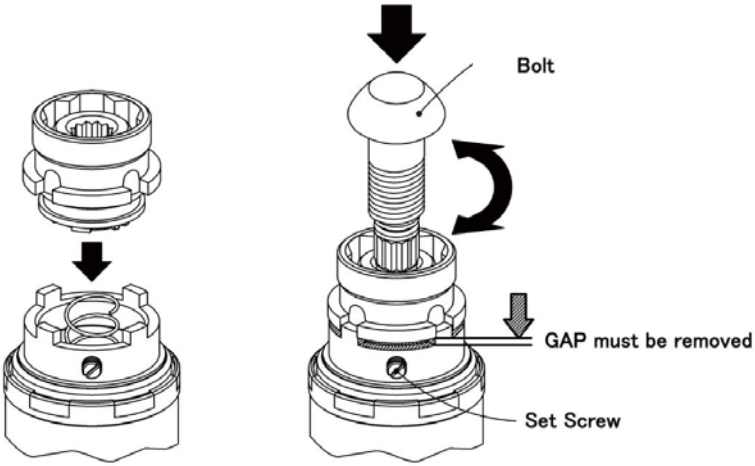

⚠WARNING

●There should be no gap between the socket assembly and the wrench.

The gap invites accidents or breakage of the sockets or the wrench body.

■No.2

○Remove Spiral Retaining Ring using screw driver (−) and then remove inner & outer socket assembly from wrench body

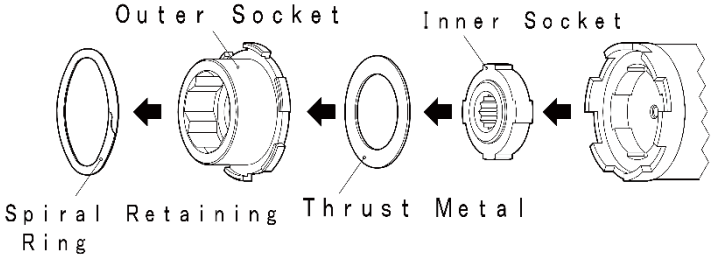

○Select adequate inner & outer socket assembly of the bolts being tightened. i.e. Use TONE genuine M30 inner & outer socket assembly for tightening M30 TC bolt/nut assembly.

○Set inner & outer socket assembly to the wrench body and completely remove the gap between socket assembly and wrench body. And then, attach Spiral Retaining Ring to wrench body

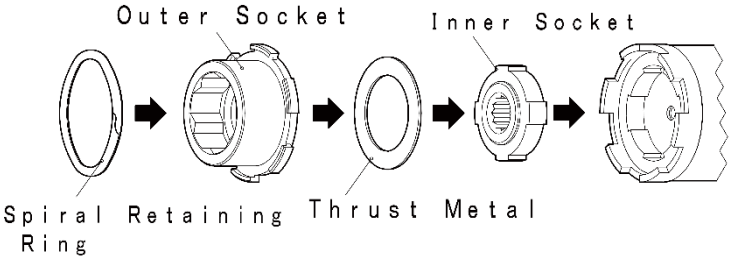

⚠WARNING

●**There should be no gap between the socket assembly and the wrench.**

The gap invites accidents or breakage of the sockets or the wrench body.

OPERATING PROCEDURE

⚠CAUTION

●Warm up procedure with no-load should be carried out about 5 minutes before operation.

○ Especially, when the wrench is used at low torque setting under low temperature (0～10℃), the warm up procedure with no-load must be carried out at least 5minutes. In this case, the angle setting dial should be set at Maximum.

○ After the warm up procedure is finished, set the desired angle and squeeze the trigger switch to check the activation of the wrench.

1. Snug Tightening Operation

①Set the change lever or switch to "R"(clockwise) position.

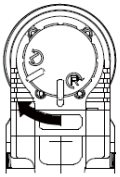

②Set the "Mode Changing Switch" to "SNUG" position.

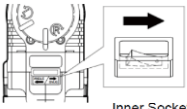

③Slide the inner socket over the bolt pintail.

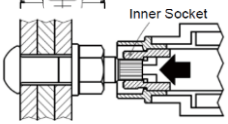

④Slide the outer socket over the nut.

- Slightly turn the Internal Gear when slide over is difficult.
- The Outer Socket cannot be engaged on the nut when Anti defacement mechanism of the Inner Socket detects improper Inner Socket engagement.

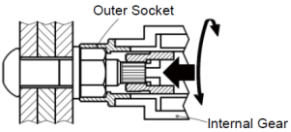

⑤Squeeze the trigger switch to start tightening. The outer socket rotates to tighten the nut.

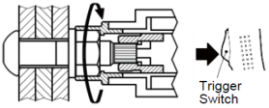

⑥The wrench shuts off automatically when snug tightening is completed.

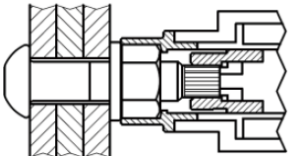

⚠WARNING

- **Make sure that motor stops before setting bolts/nuts.**
  If you set wrench on bolts/nuts while the motor is running, you cannot tight bolts/nuts correctly, and it results in injury or accident.
- **After completion of the snug cycle, make sure there is no gap between the nut and the surface of the steel grip.**
  If a gap remains between the nut and the steel grip, "SNUG TIGHTENING" has not been completed successfully.

⚠CAUTION

- **Do not release the trigger switch before the wrench automatically shuts off.**
  The preset snug tightening torque can only be obtained when the automatic shut off functions correctly.

2. Turn of the Nut Tightening Operation

①Set the change lever or switch to "R"(clockwise) position.

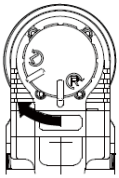

②Set the "Mode Changing Switch" to "ANGLE" position.

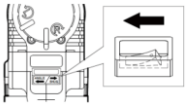

②Set the wrench for the desired angle of rotation with (−) driver.

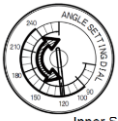

③Slide the inner socket over the bolt pintail.

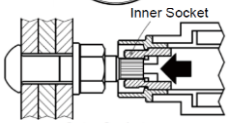

④Slide the outer socket over the nut.

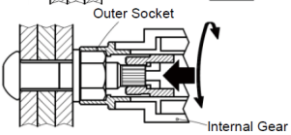

⑤Squeeze the trigger switch to start tightening. The outer socket rotates to tighten the nut.

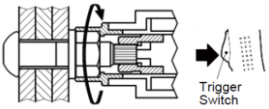

⑥The wrench shuts off automatically when the socket reaches the preset angle of rotation.

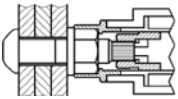

⚠WARNING

- **Make sure that motor stops before inserting bolts/nuts.**
  If you insert bolts/nuts while the motor is rotating,
  you could not tight bolts/nuts correctly, and it results in injury or accident.
- **Never tighten the same bolt/nut twice. (Never apply too much torque to the same bolt/nut.)**
  Failure to follow this instruction may result in breakage of the bolt/but, malfunction and personal injury.
- **The tightening angle and change lever should be set with the motor stopped.**
- **Check the position of the change lever or switch to avoid the mistake of tightening direction.**

⚠CAUTION

- **Do not release the trigger switch before the wrench automatically shuts off.**
  The preset snug tightening torque can only be obtained when the automatic shut off functions correctly.
- **Only one cycle of final installation (angle of rotation) is permitted.**
  If subsequent rotation after completed final installation is desired,
  please contact your distributor.
  Failure to follow these instructions
  may result in improper tensioning or breakage of the wrench.
- **Handle the angle setting dial carefully.**
  Do not turn the angle setting dial with force. Beware of banging accidents during tightening operation to protect the angle setting dial.
- **Angle setting can only be done when motor is OFF.**
- **Use the wrench within its rated maximum torque.**
- **Keep electric motor well ventilated.**
  Do not put any foreign materials into the vent.
- **Do not abuse the wrench to avoid malfunction and breakage.**

2. Loosening Operation

①Set the change lever or switch to "L"(counterclockwise) position.

②Set the "Mode Changing Switch" to "ANGLE" position.

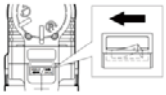

②Adjust the angle setting dial to the maximum angle with (−) driver.

③Slide the inner socket over the bolt pintail.

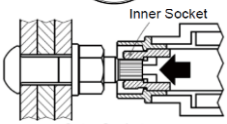

④Slide the outer socket over the nut.

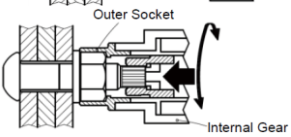

⑤Squeeze the trigger switch to start tightening. The outer socket rotates to tighten the nut.

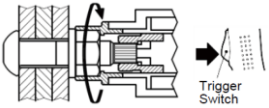

⑥When loosening operation is done, release the trigger switch to stop the wrench.

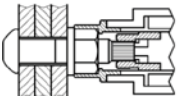

＊ In the case that the nut is not loosened, stop the operation immediately since the nut may be tightened by a higher torque than that of the wrench.
Failure to follow these instructions may result in malfunction.

⚠WARNING
● **Never tighten the same bolt/nut twice. (Never apply too much torque to the same bolt/nut.)** *Failure to follow this instruction may result in breakage of the bolt/but, malfunction and personal injury.*
● **The tightening angle and change lever should be set with the motor stopped.**
● **Check the position of the change lever or switch to avoid the mistake of tightening direction.**

⚠CAUTION
● **Handle the angle setting dial carefully.** *Do not turn the angle setting dial with force. Beware of banging accidents during tightening operation to protect the angle setting dial.*
● **Angle setting can only be done when motor is OFF.**
● **Use the wrench within its rated maximum torque.**
● **Keep electric motor well ventilated.** *Do not put any foreign materials into the vent.*
● **Do not abuse the wrench to avoid malfunction and breakage.**

METHOD OF ANGLE SETTING

1. Adjust tightening angle

■ Graduations of the angle setting dial are just a guidance.
Adjust tightening angle setting before tightening when high accuracy tightening angle control is required.

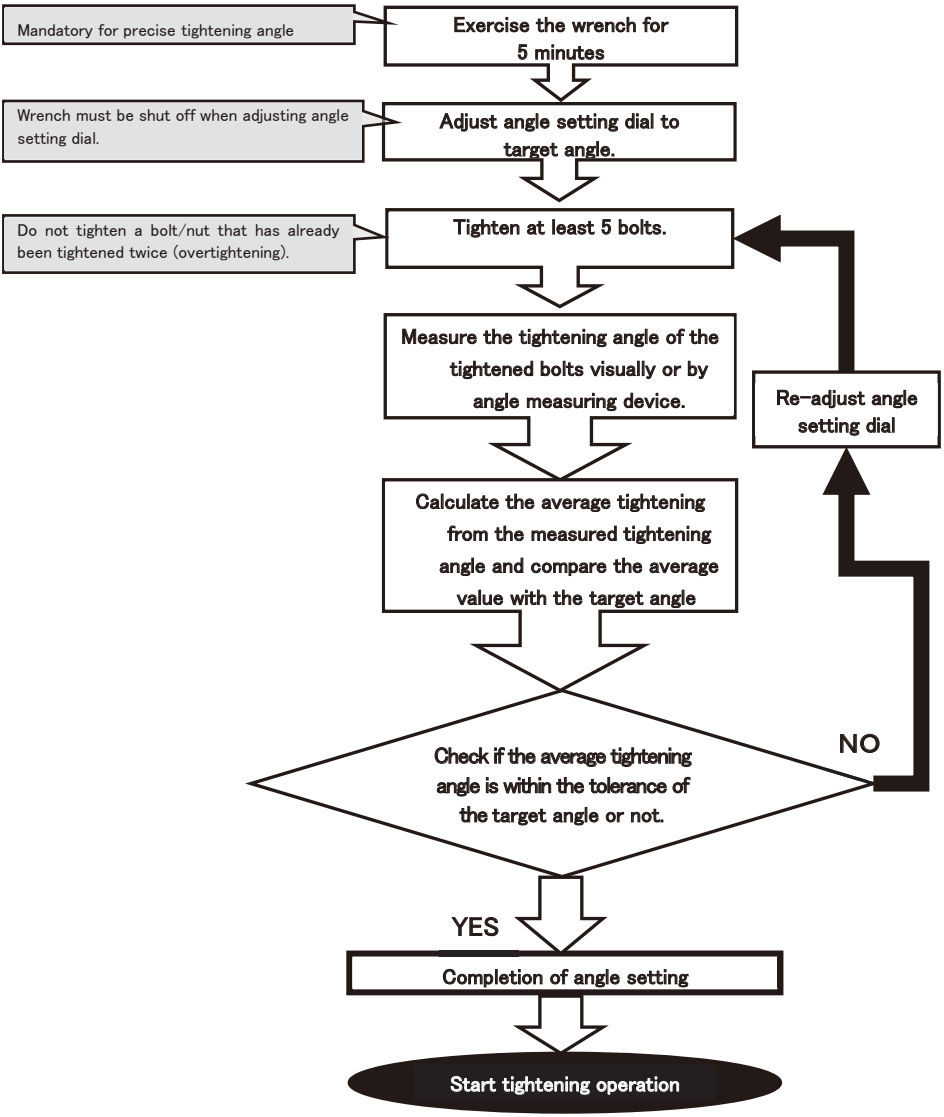

○Set the tightening angle when the wrench must be shut off.

○Never tighten the same bolt / nut twice.

⚠WARNING
● **Adjustment of the tightening angle setting has to be done daily before operation and when tightening conditions change.**
● **Periodically overhaul of the wrench is recommended to implement steady and proper turn of the nut tightening.**
● **Never tighten the same bolt/nut twice. (Never apply too much torque to the same bolt/nut.)** *Failure to follow this instruction may result in breakage of the bolt/but, malfunction and personal injury.*

INSPECTION & MAINTENANCE

⚠WARNING

● **Turn off the switch and remove the storage battery from the wrench. Also, remove the power plug from the outlet of the charger before inspection and maintenance.**
Accidental starting invites serious injury.

○ Clean dust and debris from the sockets periodically.

○ Use only a dry cloth to clean your wrench and sockets since organic solvents such as benzene, thinner and gasoline may cause cracks or discoloration to those parts.

○ Be careful not to let oil and organic solvents get inside the motor.

○ Store wrench in the metal case after operation and keep it dry.

○ Overhaul must be carried out every 6 months or 30,000 tightening, whichever comes first. Contact your distributor for overhaul.

○ Carbon brushes must be regularly inspected and replaced with the new genuine TONE carbon brushes when the brush length becomes less than 5 or 6 mm.

＊ Carbon brushes are placed in two positions.

＊ Indicate the wrench model when carbon brushes are needed because carbon brushes differ from model to model.

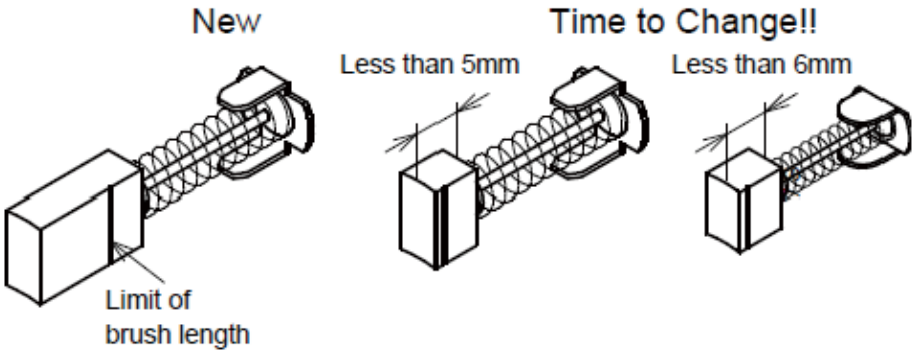

○ Replace carbon brush as the drawing below.

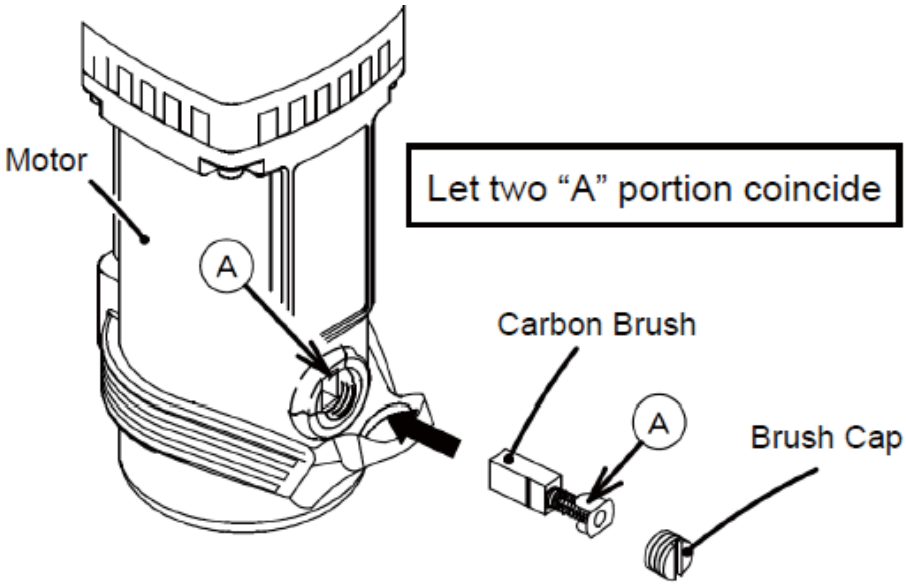

EXPLANATION ON LED INDICATION

■The TORQUE/ANGLE WRENCH is provided with GREEN and RED LED lights that indicate whether the tightening operation has been successfully completed or any trouble has occurred.

● : Lights off (G) (R) : Light on ✺ : Flashing (5 times/sec)
✺ : Flashing (2 times/sec) ✺ : Flashing (1 times/sec)

Normal Condition

Indication	LED Meaning	Indication	LED Meaning
(G) (R) ↓ After 1 sec. (G) ●	Power ON ↓ "Ready"	(G) ● ↓ Start Tightening (G) ● ↓ Complete Tightening (G) ●	No-load operation ↓ Tightening operation ↓ Tightening Finished

Trouble Detected

Indication	LED Meaning	Remedy
● (R)	Tightening was not completed correctly.	Check the bolt and nut to be tightened.
	The trigger switch was released Before tightening was completed.	Do not release the trigger switch during the tightening operation.
	Repeated tightening of the same bolt detected	Never repeat tightening of same bolt to prevent over-torque.
	● (R) ↓ After 5 sec ● ●	●Method of Reset To reset the wrench, release the trigger switch. The wrench is now ready. ↓ LED Automatically off after 5 seconds
Others	The wrench is broken down.	Need to repair. Contact your distributor.

NOISES AND VIBRATION

Please refer to the specifications list for sound pressure levels and sound power level , vibration level. The uncertainty in sound pressure level and sound power level are 3 dB(A).

These declared values were obtained by laboratory type testing in accordance with the stated standards and are suitable for comparison with the declared values of other tools tested in accordance with the same standards. These declared values are not adequate for use in risk assessments and values measured in individual work places may be higher. The actual exposure values and risk of harm experienced by an individual user are unique and depend upon the way the user works, the workpiece and the workstation design, as well upon the exposure time and the physical condition of the user.

You need to identify safety measures to protect the operator that are based on an estimation of exposure in
the actual conditions of use (taking account of all parts of the operating cycle such as the times when the tool is
switched off and when it is running idle in addition to the trigger time).

MEMO

MEMO

AFTER SALES SERVICE

■ Please use correctly according to the precautions written on the instruction manual, cordless wrench body, accessories, etc.

■ For more information about after-sales service, please contact the distributor where you purchased the product.

■ When contacting distributor, please report in detail the model, serial number, date of purchase, voltage, and fault conditions.

⚠WARNING

● **Do not use wrench when malfunction, deficiency in wrenches performance, personal injury or property loss is foreseen.**
If possible, prepare backup wrenches beforehand.

TONE TONE CO., LTD.

6-25, KOTOBUKICHO, KAWACHINAGANO-SHI,
OSAKA 586-0026, JAPAN
Web Site: https://www.tonetool.co.jp
e-mail: overseas@tonetool.co.jp

●Specifications and the design are subject to change without notice. ●

IMKA113