TONE

CORDELESS SNUG-SHEAR WRENCH

TO BE PRESERVED

INSTRUCTION MANUAL No.2611

⚠WARNING

- ●Read and fully understand all the instructions before use.
- ●Keep this manual in designated place for easy and quick reference.
- ●The models mentioned on this manual are designed for use outside Japan.
  Warranty shall be void if above mentioned models are use in Japan.

Thank you for purchasing our product.

■Upon receipt, check and confirm the following:

- Check any transport damages.
- Check for any loose or lost screws and bolts.
- Check the model as per order.
- Check all the accessories are contained.

If any problems are found, contact your distributor.

■Read this instruction manual carefully before use.
Full understanding of manual is essential to prevent personal injury or malfunction.

■If the manual or warning label is lost or becomes illegible,
or if an additional manual is required,
please contact the distributor where you purchased the product.

If you have any questions about the products or the contents of this instruction manual, contact your distributor.

TONE CO., LTD.

CONTENTS

APPLICATION....3
PARTS NAME....3
SAFETY INSTRUCTION....4
GENERAL POWER TOOL SAFETY WARNINGS....5
PRECAUTIONS FOR USE....9
BEFORE USE....16
CHANGING ACCESSORIES -SOCKETS-....17
INSTALLATION / REMOVAL OF STORAGE BATTERY....21
INSTALLATION / REMOVAL OF BATTERY GUARD....22
REMAINING BATTERY LEVEL....23
BATTERY CHARSING....24
STORAGE OF BATTERIES....25
OPERATING PROCEDURE....26
INSPECTION & MAINTENANCE....30
FAILURE DIAGNOSIS....31
EXPLANATION ON LED INDICATION....32
NOISES AND VIBRATION....33
AFTER SALES SERVICE....36

APPLICATION

■CORDLESS SNUG-SHEAR WRENCH is a battery operated tool
for snug and full tightening Tension Control Bolt/Nut/Washer assemblies.

PARTS NAME

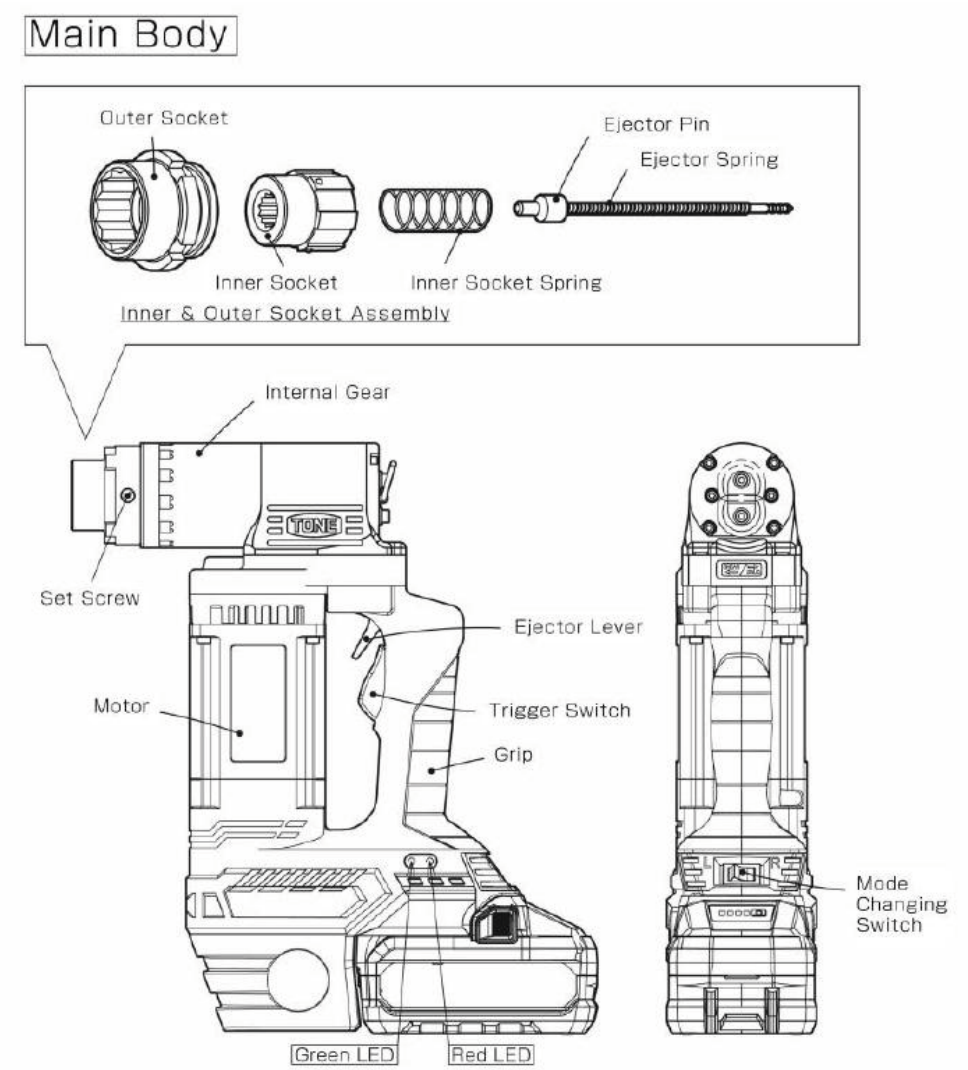

SAFETY INSTRUCTION

This manual specifies three (3) basic safety instructions:



■Instructions are classified by the degree of risk and described as follows:

DANGER	Danger is used to indicating threatening dangerous or unsafe practices that could immediately result in severe personal injury or death in the worst case.
WARNING	Warning is used to indicating hazardous or unsafe practices that could result in severe personal injury or death on the worst occasion.
CAUTION	Caution is used to indicate hazardous or unsafe practices that could result in personal injury or product or property damage.

Even if the risk is classified as CAUTION , the risk could become a more serious result depending on conditions. Make sure to follow all instructions when using.

GENERAL POWER TOOL SAFETY WARNINGS

⚠WARNING

Read all safety warnings, instructions, illustrations and specifications provided with this power tool. *Failure to follow all instructions listed below may result in electric shock, fire and/or serious injury.*

Save all warnings and instructions for future reference.

The term ″ power tool″ in the warnings refers to your mains-operated (corded) power tool or battery-operated(cordless)power tool.

1) Work area safety

a) **Keep work area clean and well lit.** *Cluttered or dark areas invite accidents.*

b) **Do not operate power tools in explosive atmospheres, such as in the presence of flammable liquids, gases or dust.** *Power tools create sparks which may ignite the dust or fumes.*

c) **Keep children and bystanders away while operating a power tool.** *Distractions can cause you to lose control.*

2) Electrical safety

a) **Power tool plugs must match the outlet. Never modify the plug in any way. Do not use any adapter plugs with earthed (grounded) power tools.** *Unmodified plugs and matching outlets will reduce risk of electric shock.*

b) **Avoid body contact with earthed or grounded surfaces, such as pipes, radiators, ranges and refrigerators.** *There is an increased risk of electric shock if your body is earthed or grounded.*

c) **Do not expose power tools to rain or wet conditions.** *Water entering a power tool will increase the risk of electric shock.*

d) **Do not abuse the cord. Never use the cord for carrying, pulling or unplugging the power tool. Keep cord away from heat, oil, sharp edges or moving parts.** *Damaged or entangled cords increase the risk of electric shock.*

e) **When operating a power tool outdoors, use an extension cord suitable for outdoor use**. *Use of a cord suitable for outdoor use reduces the risk of electric shock.*

f) **If operating a power tool in a damp location is unavoidable, use a residual current device (RCD) protected supply.** *Use of an RCD reduces the risk of electric shock.*

3) Personal safety

a) **Stay alert, watch what you are doing and use common sense when operating a power tool. Do not use a power tool while you are tired or under the influence of drugs, alcohol or medication.** *A moment of inattention while operating power tools may result in serious personal injury.*

b) **Use personal protective equipment. Always wear eye protection.** *Protective equipment such as a dust mask, non-skid safety shoes, hard hat for appropriate conditions will reduce personal injuries.*

c) **Prevent unintentional starting. Ensure the switch is in the off-position before connecting to power source and/or battery pack, picking up or carrying the tool.** *Carrying power tools with your finger on the switch or energising power tools that have the switch on invites accidents.*

d) **Remove any adjusting key or wrench before turning the power tool on.** *A wrench or a key left attached to a rotating part of the power tool may result in personal injury.*

e) **Do not overreach. Keep proper footing and balance at all times.** *This enables better control of the power tool in unexpected situations.*

f) **Dress properly. Do not wear loose clothing or jewellery. Keep your hair and clothing away from moving parts.** *Loose clothes, jewellery or long hair can be caught in moving parts.*

g) **If devices are provided for the connection of dust extraction and collection facilities, ensure these are connected and properly used.** *Use of dust collection can reduce dust-related hazards.*

h) **Do not let familiarity gained from frequent use of tools allow you to become complacent and ignore tool safety principles.** *A careless action can cause severe injury within a fraction of a second.*

4) Power tool use and care

a) **Do not force the power tool. Use the correct power tool for your application.** *The correct power tool will do the job better and safer at the rate for which it was designed.*

b) **Do not use the power tool if the switch does not turn it on and off.** *Any power tool that cannot be controlled with the switch is dangerous and must be repaired.*

c) **Disconnect the plug from the power source and/or remove the battery pack, if detachable, from the power tool before making any adjustments, changing accessories, or storing power tools**. *Such preventive safety measures reduce the risk of starting the power tool accidentally.*

d) **Store idle power tools out of the reach of children and do not allow persons unfamiliar with the power tool or these instructions to operate the power tool.** *Power tools are dangerous in the hands of untrained users.*

e) **Maintain power tools and accessories. Check for misalignment or binding of moving parts, breakage of parts and any other condition that may affect the power tool' s operation. If damaged, have the power tool repaired before use.** *Many accidents are caused by poorly maintained power tools.*

f) **Keep cutting tools sharp and clean.** *Properly maintained cutting tools with sharp cutting edges are less likely to bind and are easier to control.*

g) **Use the power tool, accessories and tool bits etc. in accordance with these instructions, taking into account the working conditions and the work to be performed.** *Use of the power tool for operations different from those intended could result in a hazardous situation.*

h) **Keep handles and grasping surfaces dry, clean and free from oil and grease.** *Slippery handles and grasping surfaces do not allow for safe handling and control of the tool in unexpected situations.*

5) Battery tool use and care

a) **Recharge only with the charger specified by the manufacturer.** *A charger that is suitable for one type of battery pack may create a risk of fire when used with another battery pack.*

b) **Use power tools only with specifically designated battery packs.** *Use of any other battery packs may create a risk of injury and fire.*

c) **When battery pack is not in use, keep it away from other metal objects, like paper clips, coins, keys, nails, screws or other small metal objects, that can make a connection from one terminal to another.** *Shorting the battery terminals together may cause burns or a fire.*

d) **Under abusive conditions, liquid may be ejected from the battery; avoid contact. If contact accidentally occurs, flush with water. If liquid contacts eyes, additionally seek medical help.** *Liquid ejected from the battery may cause irritation or burns.*

e) **Do not use a battery pack or tool that is damaged or modified.** *Damaged or modified batteries may exhibit unpredictable behaviour resulting in fire, explosion or risk of injury.*

f) **Do not expose a battery pack or tool to fire or excessive temperature.** *Exposure to fire or temperature above 130 ° C (265° F) may cause explosion.*

g) **Follow all charging instructions and do not charge the battery pack or tool outside the temperature range specified in the instructions.** *Charging improperly or at temperatures outside the specified range may damage the battery and increase the risk of fire.*

6) Service

a) **Have your power tool serviced by a qualified repair person using only identical replacement parts.** *This will ensure that the safety of the power tool is maintained.*

b) **Never service damaged battery packs.** *Service of battery packs should only be performed by the manufacturer or authorized service providers.*

7) Hold the power tool by insulated gripping surfaces, when performing an operation where the fastener may contact hidden wiring. *Fasteners contacting a ″ live″ wire may make exposed metalparts of the power tool ″ live″ and could give the operator an electric shock.*

⚠PRECAUTIONS FOR USE

■ To prevent accidents, personal injury and etc,
read and follow all instructions listed below.

⚠DANGER

● **Beware of electric shock when operating at high place.**
Failure to follow this instruction may result in fall down accidents.

⚠WARNING

● **Beware of electric shock.**

○ Never use the wrench under rainy or snowy condition.

○ Never touch the plug with wet hands.

Failure to follow this instruction may result in electric shock, fire or electric leakage.

● **Electric cord must be regularly inspected.**

○ Stop using the wrench if there is a problem with the electric cord.

○ Contact your distributor for repair.

Failure to follow this instruction may result in electric shock or electric leakage.

● **Beware of fall down accidents when working at a high place.**

○ Wear safety belt

○ Provide safety net or canvas as safe guarding against falling items.

○ Confirm that no one is underneath the working site before operation.

○ Stop operation when physically or mentally tired.

Failure to follow these instructions may result in fall down accidents.

● **Avoid overloading.**

○ Use the wrench and its accessories within the rated specifications.

Overloaded wrench and its accessories may result in malfunction of the wrenches, accidents or personal injury.

● **Avoid accidental Starting.**

○ Ensure that the switch is in the off-position before plugging into power source or carrying the wrench with the storage battery installed.

○ Never carrying the wrench with your fingers on the switch.

● **Disconnect the plug from the power source or remove the storage battery from the wrench when:**

○ Not in use.

○ Changing accessories.

○ Inspection and maintenance.

○ Or other danger is foreseen.

Failure to follow these instructions may result in accidental starting and personal injury.

● **Use appropriate power source as indicated on the rating plate.**

Failure to follow this instruction may result in fire or burn accidents.

⚠WARNING

● **Do not disassemble or modify the wrench.**

○ Disassembly or modification made by unauthorized personnel may result in malfunction or personal injury.

○ Disassembly & Re-assembly work is permitted.

● **Store wrench and strage battery, charger in the case and keep it at the designated place when not in use.**

○ Store wrench and storage battery in a lockable dry location to keep any unauthorized personnel away.
Failure to follow this instruction may result in malfunction or accidents.

○ Do not store the wrench or storage battery in a place where the temperature may rise above 50℃
(such as a metal box or a car in the summer).
It may cause deterioration of the storage battery and cause smoke and fire.

○ To prevent condensation, avoid leaving the product in an environment where the temperature is likely to drop below freezing for long periods of time. Store the product in a warm indoor location if possible.
It may cause accidents, malfunctions, poor accuracy, electric shock, fire, or electric leakage.

● **Immediately stop using the wrench and turn off the switch when unusual sound, vibration, or smell is detected.**

○ Contact your distributor immediately.
Failure to follow this instruction may result in serious injury.

● **Contact your distributor for repair service.**

○ Repair work should only be carried out by a qualified technician.
Repair work done by an inexperienced person may cause accidents, injury or malfunction.

● **Check the following items before operation.**

○ Check for any deformation, crack or damage on the wrench body and parts.

○ Do not use the wrench if any problem are found on items.
It may cause electric shock, fire, burns, or injury.

⚠WARNING

● **Immediately check the wrench when it is dropped down or banged.**

○ Check for deformation, crack, damage and other abnormality.
Stop using the wrench if any abnormality is found.
Continued use of fault wrench may result in accidents and personal injury.

● **Consider the surrounding conditions of the work area and storage area.**

○ Do not use, leave, or store the wrench, charger, or battery in the rain or in damp places.
It may result in electric shock.

● **Properly install sockets as described in this manual.**

○ Incomplete installation may result in accidents and personal injury.

⚠WARNING

● **Use the specified storage battery and charger.**

○ Do not use modified storage batteries (including storage batteries that have been disassembled and replaced with internal parts such as cells).
There is a risk that the performance and safety of the wrench will be impaired.
It may cause injury, malfunction, smoke, heat generation, ignition, explosion, etc.

● **Read the instruction manual for the battery and charger carefully and understand the contents before use.**

● **Consider the surrounding conditions of the workplace and storage location.**

○ Do not use the wrench body, charger, or storage battery in the rain or a damp place, or leave or store it.
It may cause electric shock or smoke.

● **Do not use the wrench if its terminals (battery attachment point) or battery terminals are deformed.**
If the battery is attached, a short circuit may occur, resulting in smoke, heat, fire, or explosion.

● **Do not allow chips or dust to accumulate on the wrench terminals (battery attachment area) or battery terminals.**

○ Before use, make sure that there is no chips or dust accumulated on the terminals.

○ Do not allow chips or dust that has accumulated on the wrench during operation to fall on the terminals.

○ When not in use or after use, do not leave the wrench or battery in a location where chips or dust may fall.
It may cause a short circuit, resulting in smoke, heat, fire, or explosion.

● **Make sure before, during, and after use there are no abnormalities, such as strange odors, heat, discoloration, deformation, damage (including cracks), or other abnormalities. If you notice any abnormalities, immediately discontinue use and consult the store where you purchased the product.**

⚠CAUTION

● **Keep work area clean.**

○ Cluttered areas and benches invite accidents.

● **Keep children away.**

○ Do not let children touch the wrench and electric cord.

○ All visitors should be kept away from work area.

● **Secure work area.**

○ Keep body stance balanced and firmed.

○ Never wrap the electric cord around something.

○ Work carefully to avoid tripping over the cord.

○ Keep work area well lit.

● **Use suitable model for each application.**

○ Do not use wrench beyond its rated specifications.

○ Do not use wrench for purpose not intended.

● **Dress properly.**

○ Always wear gloves and non-skid footwear when operating outdoor.

○ Always wear safety helmet.

● **Use genuine accessories from our company.**

● **Keep electric motor well ventilated.**

○ Do not put any foreign materials into the vent.

○ Do not block exhaust vent.

● **Maintain wrench.**

○ Keep wrench handle clean, dry and free of oil or grease.

● **Observe local laws and rules concerning noise level.**

⚠CAUTION

● **If using the battery in low temperature conditions, warm the battery to room temperature. Or store it in a room temperature environment until immediately before use.**

○ If the battery is cold, its performance will be reduced compared to normal use, and it may not be possible to tighten it sufficiently.

Storage batteries for recycling

Batteries are a valuable recyclable resource.
When disposing of storage batteries or products, please cooperate with recycling and bring them to the distributor where you purchased the product.



For new batteries and chargers

Please use batteries and chargers listed in our catalog.
We cannot guarantee safety or product quality if you use batteries and chargers other than those specified by our company, or if battery and charger have been disassembled or modified (including batteries where internal parts such as cells have been replaced).

Precautions for using storage battery

While using this product, the motor may stop in the following cases (1), (2), and (3) even if the switch is pulled, but this is due to the protection function and is not a malfunction.

(1) The motor will stop when the battery level is low. In this case, charge the battery immediately.
(2) If the wrench body becomes overloaded, the motor may stop. In this case, release the switch once to eliminate the cause of the overload.
(3) If the storage battery becomes overheated, the motor may stop. In this case, stop using the storage battery, remove it from the wrench body, and cool the storage battery sufficiently with a well-ventilated shade.
Then it can be used again. In addition, be sure to observe the precautions below to prevent leakage, heatgeneration, smoke, and ignition of the storage battery.

BEFORE USE

⚠WARNING

● **Check followings before use.**

It may cause injury.

○ Check items

Check for any deformation, crack or damage on wrench body, parts, etc.
Do not use wrench if any problem is found on items.

○ Check the power supply

Use the power supply indicated on the nameplate.

○ Choose Socket

Prepare a socket that matches the size of the bolt/nut you tighten.

○ Install Parts

Parts should be securely installed on the wrench.
Loose installation may result in accidents and personal injury.

CHANGING ACCESSORIES -SOCKETS-

■No.1

⚠WARNING

● **Release the ejector pin by pulling the ejector lever before replacing the socket**

Accidental ejector pin release invites blindness or injury.

(1) Remove inner & outer socket assembly from wrench by unscrewing set screws. Do not remove set screws completely from outer socket holder.

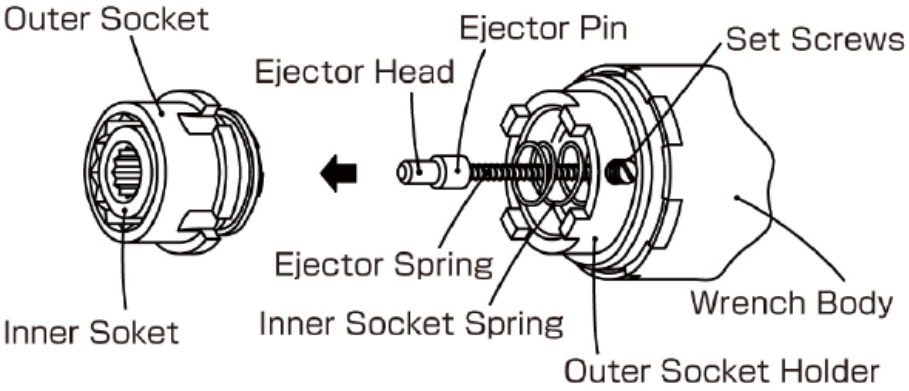

(2) Remove inner socket from outer socket by pushing projecting pin using screwdriver or TC bolt.

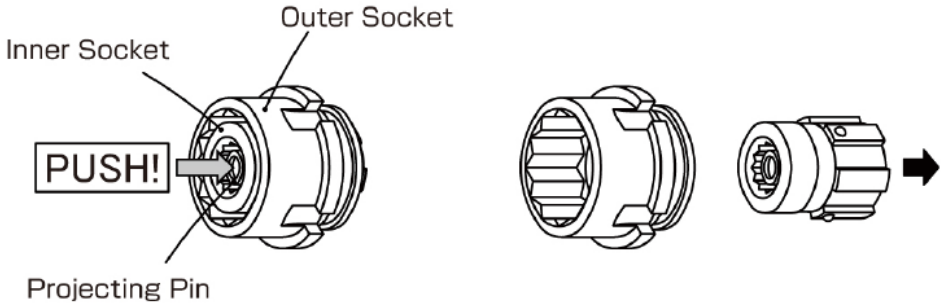

● Projecting pin is a doughnut-shaped pin in the inner socket.

(3) Select adequate inner & outer socket assembly of the bolts being tightened.
Use TONE genuine M30 inner & outer socket assembly for tightening
M30 TC bolt/nut.

(4) Place the inner socket vertically then slide the outer socket over the inner socket. Push projecting pin down using screwdriver or pintail of the TC bolt and inner & outer socket will be appropriately assembled

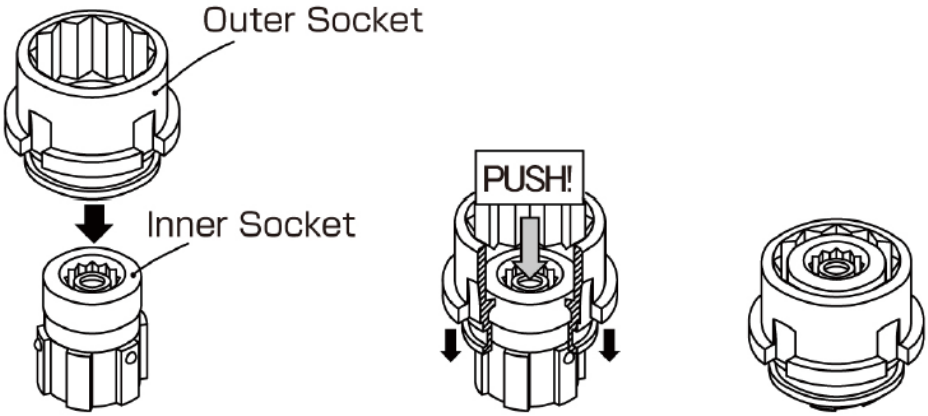

(5) Set inner & outer socket assembly to the wrench body and completely remove the gap between socket assembly and wrench body.
The gap can be removed by turning & pushing down screwdriver or TC bolt into the inner socket.

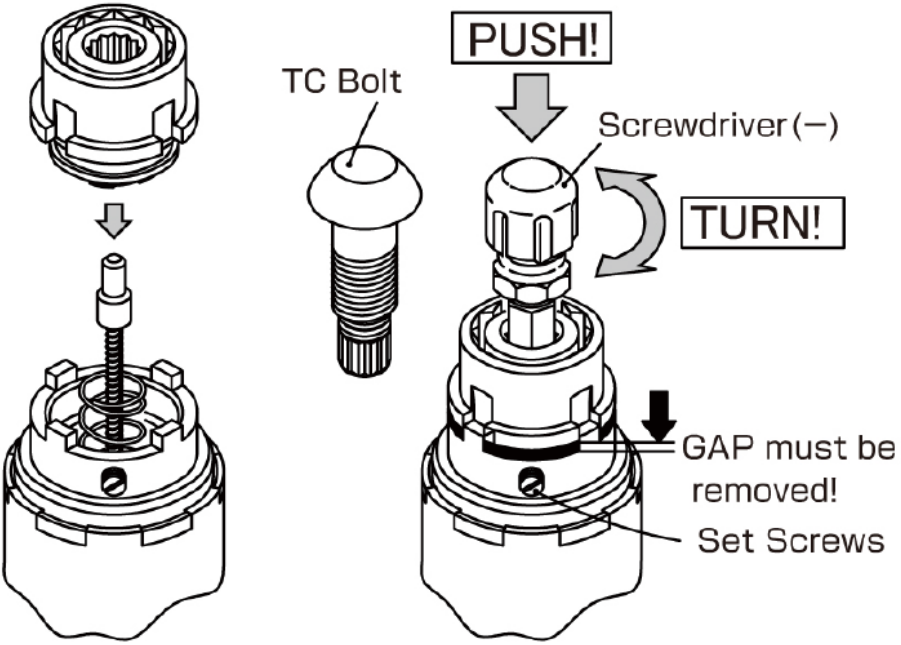

* Fasten the set screws only after gap is completely removed.

⚠WARNING
● **There should be no gap between the socket assembly and the wrench.** *The gap invites accidents or breakage of the sockets or the wrench body.*

■No.2

(1) Remove the spirolox from the wrench body by using (−) driver and then remove the outer socket, thrust metal and inner socket from the wrench body.

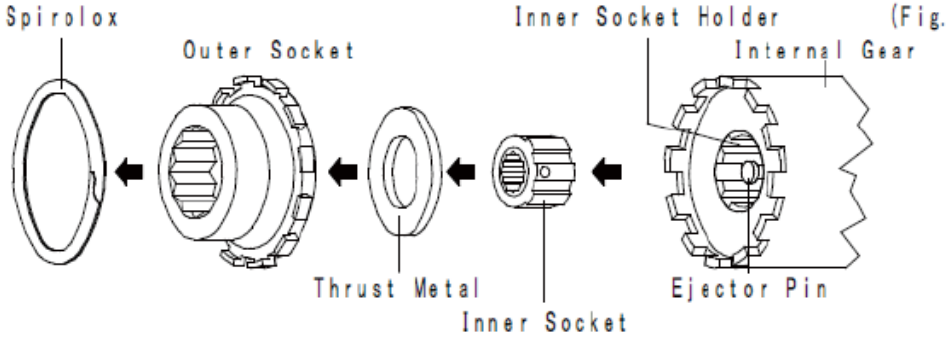

(Fig.

(2) Prepare outer and inner-sockets of the right sizes suitable for the size of bolt to be tightened.

・・・・・・Example : Use our US series socket for 7/8" to 7/8" bolts.

(3) Slide the inner socket into the inner socket holder and then slide the thrust metal over the inner socket.

(4) Mount the outer socket on the internal gear to remove the gap between the outer socket and the internal gear. And then, securely fix the inner & outer socket assembly on the wrench body by the spirolox.

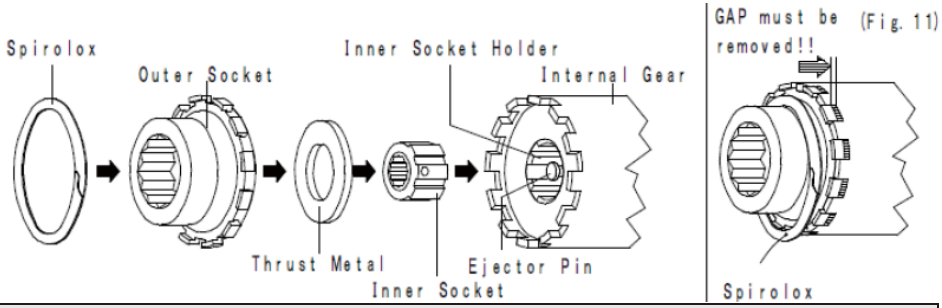

(Fig. 11)

⚠WARNING

● **There should be no gap between the socket assembly and the wrench.**

The gap invites accidents or breakage of the sockets or the wrench body.

INSTALLATION / REMOVAL OF STORAGE BATTERY

1. Removing the storage battery

When removing the storage battery from the wrench body, slide it while pressing the latches on both sides

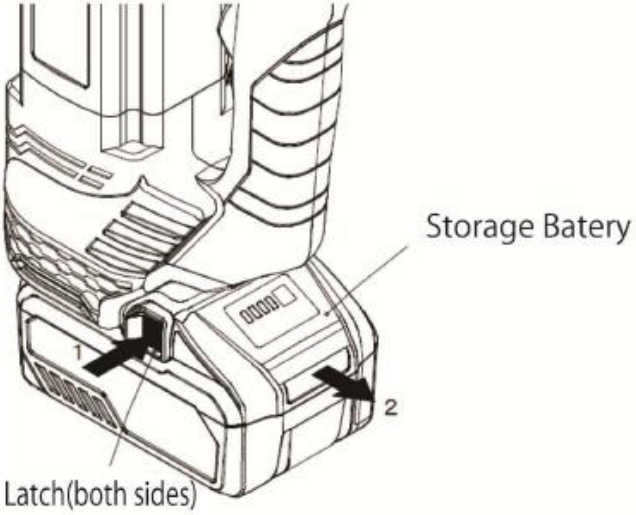

2. Installing the storage battery

When attaching the storage battery to the wrench body, align it with the groove on the wrench body and insert it completely until you hear a click.

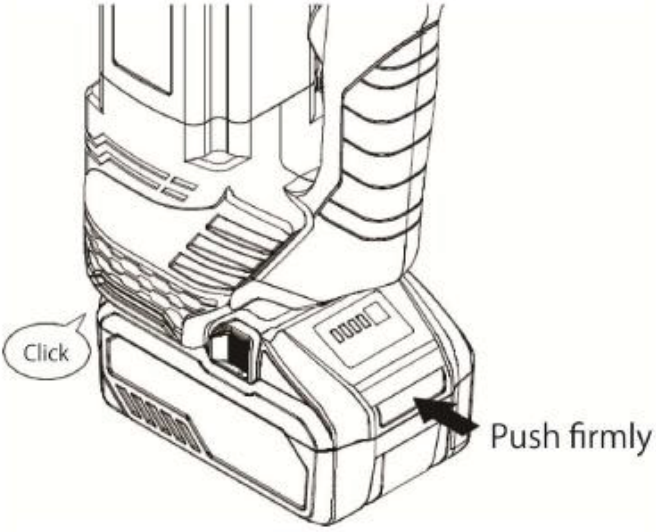

INSTALLATION / REMOVAL OF BATTERY GUARD

○ How to install the battery guard

Assemble the guard to the plate of the wrench, and use the attached hex key wrench to securely tighten the cap screw
(consisting of flat washer and spring washer) <2 pces>.

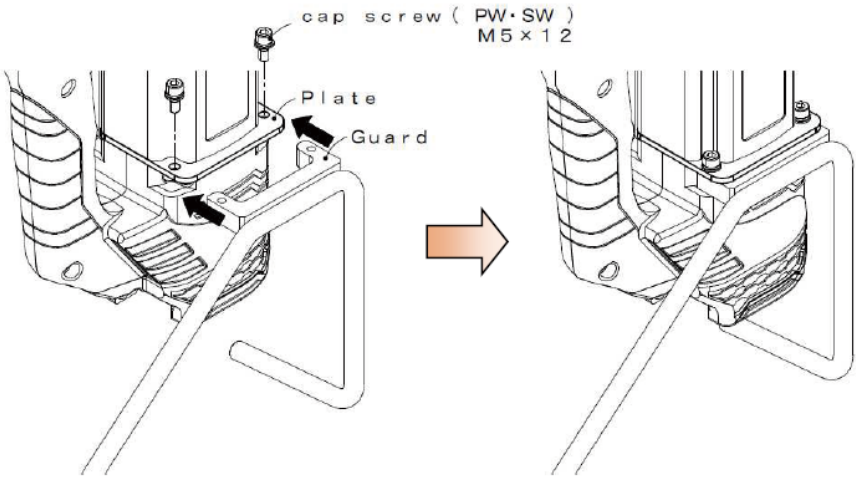

⚠WARNING

● **Be sure to install the guard.**
If installed improperly, the main body of the wrench may be subjected to strong impact, which may cause the wrench and storage battery to malfunction.

※If the guard is damaged or deformed, please contact your dealer or our sales office for repair.

REMAINING BATTERY LEVEL

○ When you press the remaining battery indicator switch, the lamp lights up and you can check the battery's remaining battery level.

○ The lamp turns off about 3 seconds after pressing the remaining battery Indicator switch.

○ The remaining battery display may differ depending on the usage environment, battery characteristics, etc., so please use it as a guide.
In addition, it may differ from the remaining battery display on the product side and the charger side that have the remaining battery display function

Lamp lighting status	Remaining Battery
	75%～100%
	50%～75%
	25%～50%
	0%～25%
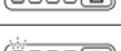	0%
	Output stopped due tohigh ※1
	Output stopped due to failure ※2

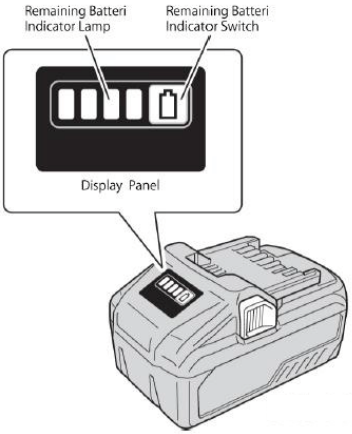

※1. Remove the storage battery from the wrench and let it cool down sufficiently.
※2. The storage battery may be out of order, so please contact the distributor where you purchased the product.

BATTERY CHARSING

⚠WARNING

- **Do not charge at voltage higher than indicated on the nameplate.**
  If charged at voltage higher than indicated on the nameplate, the charger will burn up.
- **Do not use the electrical cord if damaged.**
  Have it repaired immediately.

1. Connect the battery charger's power cord to the receptacle.
2. Insert the battery to the battery charger.

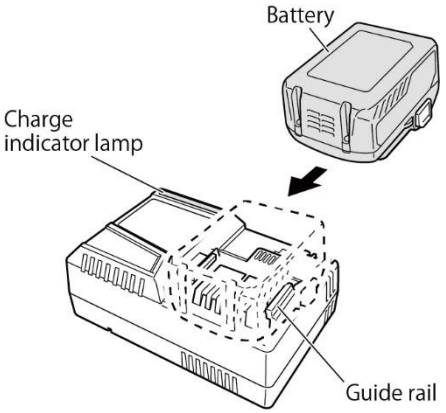

3. Charge the battery in an ambient temperature between 0 – 50 ℃.
   Battery that have become hot should be cooled for a while before being recharged.
4. Disconnect battery charger from the receptacle.

⚠CAUTION

- **Do not pull the plug out of the receptacle by pulling on the cord.**
  Make sure to grasp the plug when removing from receptacle to avoid damaging cord.

5. Remove the battery from the battery charger.
   Supporting the battery charger with hand, pull out the battery from the battery charger.

STORAGE OF BATTERIES

⚠WARNING

● **If a conductive object gets into the terminal of the lithium-ion battery, the battery may be shorted, causing heat generation, smoke, or ignition. Therefore, be sure to obey the following when storing.**

○ Do not put conductive chips, nails, wires, copper wires, or other wires in the storage case.

○ To prevent shorting from occurring, load the battery in the wrench body or insert the battery cover securely for storing until the ventilator is not visible.

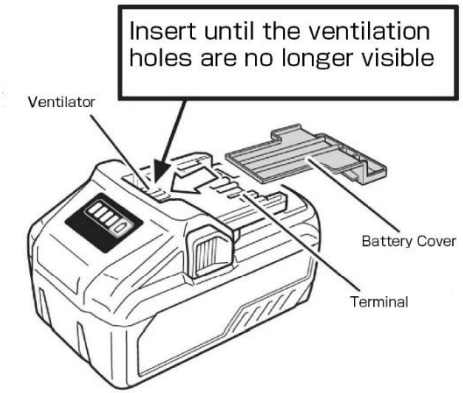

⚠CAUTION

● **Fully charge the lithium-ion battery before storing it.**

If the storage battery is stored for a long time (3 months or more) with low remaining capacity, the storage battery may deteriorate, the usage time may be significantly shortened, or the battery may not be charged.
Even if the storage battery's usage time is significantly reduced, it may be restored by repeating charging and use 2 to 5 times.
If the usage time is extremely short even after repeated charging and use, it may indicate the end of the battery life, and we recommend you purchase a new battery.

OPERATING PROCEDURE

⚠CAUTION

● **Warm up procedure with no-load should be carried out about 5 minutes before operation.**

○ Especially, when the wrench is used at low torque setting under low temperature (0～10℃), the warm up procedure with no-load must be carried out at least 5minutes. In this case, the angle setting dial should be set at Maximum.

○ After the warm up procedure is finished, set the desired angle and squeeze the trigger switch to check the activation of the wrench.

1. Operating procedure for snug tightening

①Set "tightening mode switch" to 80% position.

＊Make sure that GREEN LED is ON.

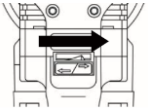

②Slide the inner socket over the bolt pintail.

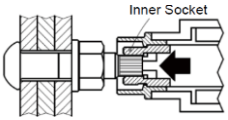

③Slide the outer socket over the nut.

- Slightly turn the Internal Gear when slide over is difficult.
- The Outer Socket cannot be engaged on the nut when Anti defacement mechanism of the Inner Socket detects improper Inner Socket engagement.

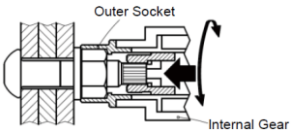

④Squeeze the trigger switch to start tightening. The outer socket rotates to tighten the nut.

＊GREEN LED keeps going ON and OFF until the wrench shuts off automatically

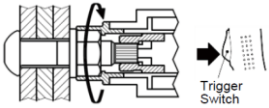

⑤The wrench shuts off automatically when the snug tightening is completed.

＊GREEN LED remains ON after the snug tightening is completed properly.

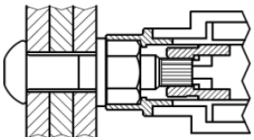

＊ In case that RED LED goes ON and OFF during the snug tightening operation ④ and⑤ above, any troubles happen on the wrench

⚠WARNING

● **Make sure that motor stops before setting wrench on bolts/nuts.**
If you set wrench on bolts/nuts while the motor is running,
you cannot tight bolts/nuts correctly, and it results in injury or accidents.

● **After completion of the snug cycle, make sure there is no gap between the nut and the surface of the steel grip.**
If a gap remains between the nut and the steel grip, "SNUG TIGHTENING" has not been completed successfully.

● **Keep others a safe distance from the work area.**
○ Do not throw pintail away. Collect pintail in a designate bag during operation.
Failure to follow this instruction may result in accidents and personal injury.

2. Operating procedure for final tightening.

①Set “tightening mode switch” to 100% position.

＊Make sure that GREEN LED keeps going ON and OFF slowly.

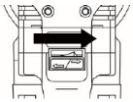

②Slide the inner socket over the bolt pintail.

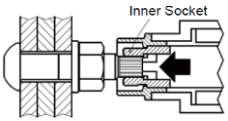

③Slide the outer socket over the nut.

- Slightly turn the Internal Gear when slide over is difficult.
- The Outer Socket cannot be engaged on the nut when Anti defacement mechanism of the Inner Socket detects improper Inner Socket engagement.

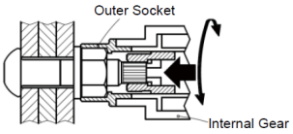

④Squeeze the trigger switch to start tightening. The outer socket rotates to tighten the nut.

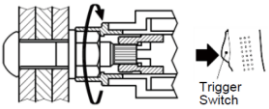

⑤Rotating speed gradually slows down as the tightening proceeds, then bolt pintail is sheared off when designated torque is reached.

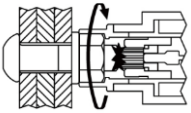

⑥When tightening is completed, remove the wrench from the bolt/nut assembly. Sheared-off bolt pintail remains in the inner socket.

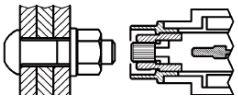

⑦Pull ejector lever to eject the sheared-off bolt pintail.

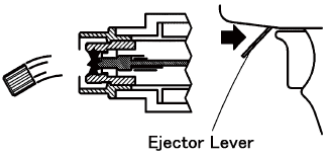

⚠WARNING

● **Make sure that motor stops before setting wrench on bolts/nuts.**
If you set wrench on bolts/nuts while the motor is running,
you cannot tight bolts/nuts correctly, and it results in injury or accident.

● **Do not release the trigger switch before the wrench automatically shuts off.**
The preset angle of rotation can only be obtained when the automatic shut off functions correctly.

● **Use the wrench within its rated maximum torque.**

● **Keep electric motor well ventilated.**
Do not put any foreign materials into the vent.

● **Do not abuse the wrench to avoid malfunction and breakage.**

● **Keep others a safe distance from the work area.**

○ Do not throw pintail away. Collect pintail in a designate bag during operation.
Failure to follow this instruction may result in accidents and personal injury.

INSPECTION & MAINTENANCE

⚠WARNING

● **Turn off the switch and remove the storage battery from the wrench. Also, remove the power plug from the outlet of the charger before inspection and maintenance.**
Accidental starting invites serious injury.

● **Replace the inner socket when sheared bolt pintail is coming off the inner socket without pulling the ejector lever.**
○ There is a risk of unexpected bolt pintail ejection when inner drive of the inner socket is worn down. The inner socket must be immediately replaced.
Failure to follow this instruction may result in serious accidents and injury.

● **Turn off the power switch and unplug the power cord or remove the battery from the wrench before maintenance or inspection, after use, or during a power outage.**
It may start up unexpectedly, causing electric shock or injury.

○ Clean dust and debris from the sockets periodically.

○ Use only a dry cloth to clean your wrench and sockets since organic solvents such as benzene, thinner and gasoline may cause cracks or discoloration to those parts.

○ Be careful not to let oil and organic solvents get inside the motor.

○ Store wrench in the metal case after operation and keep it dry.

○ Ejector pin must be regularly inspected and replaced when it wears down. Sheared bolt pintail will not be ejected from inner socket with worn ejector pin.

○ Overhaul must be carried out every 6 months or 30,000 tightening, whichever comes first. Contact your distributor for overhaul.

○ Check the terminals for chips and dust. Check from time to time before and after work as well as during work.

FAILURE DIAGNOSIS

○ About continuous use

The cordless shear wrench is equipped with a temperature protection circuit to protect the motor and the electronic components that control the drive of the motor. If you use it continuously, the temperature of the wrench will rise, so the temperature protection circuit will operate and may stop automatically. In that case, cool the wrench sufficiently. It can be used again when the temperature drops. Also, when working continuously, rest the wrench for about 15 minutes when replacing the storage battery before using it.

○ **Failure diagnosis**

Failure symptoms	Cause	How to deal
Pulling the switch dose not start	Battery is low	Storage batteries need to be recharged
Wrench shutdown	Battery is low	Please charge the battery.
	Overloaded during tightening	The motor will automatically stop when the wrench is overload. Check the tightening status and eliminate the cause of overload.
	The storage battery or wrench body has become overheated	Cooldown the storage battery and the wrench body sufficiently.
Battery can be not installed	The storage battery is not the specified one.	Use a specified multi-volt storage battery.

If ″Failure diagnosis″ does not work, please contact the distributor where you purchased the product.

Also, it may cause by the storage battery, so please bring the charger and storage battery together.

EXPLANATION ON LED INDICATION

■Red and green light equipped indicates tightening state and abnormalities.
The light turns off when the switch is released.
Check LEDs while squeezing the switch

● : Lights off (G) (R) : Light on ✺ : Flashing (5 times/sec)
✺ : Flashing (2 times/sec) ✺ : Flashing (1 times/sec)

Normal Condition (Tightening State)

Indication	LED Meaning	Remedy
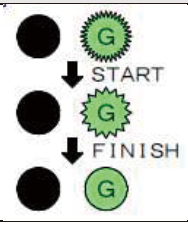	No-load operation ↓ Tightening operation ↓ Tightening Finished	Normal.

Low Battery Remaining Capacity

Indication	LED Meaning	Remedy
	Low battery remaining capacity …The wrench stops immediately after starting operation.	Charge a battery or change with a charged battery

Trouble Detected

Indication	LED Meaning	Remedy
	Tightening was not completed correctly.	Check the bolt and nut to be tightened.
	The trigger switch was released Before tightening was completed.	Do not release the trigger switch during the tightening operation.
	Repeated tightening of the same bolt detected	Never repeat tightening of same bolt to prevent over-torque.
Others	The wrench is broken down.	Need to repair. Contact your distributor.

NOISES AND VIBRATION

Please refer to the specifications list for sound pressure levels and sound power level , vibration level. The uncertainty in sound pressure level and sound power level are 3 dB(A).

These declared values were obtained by laboratory type testing in accordance with the stated standards and are suitable for comparison with the declared values of other tools tested in accordance with the same standards. These declared values are not adequate for use in risk assessments and values measured in individual work places may be higher. The actual exposure values and risk of harm experienced by an individual user are unique and depend upon the way the user works, the workpiece and the workstation design, as well upon the exposure time and the physical condition of the user.

You need to identify safety measures to protect the operator that are based on an estimation of exposure in
the actual conditions of use (taking account of all parts of the operating cycle such as the times when the tool is
switched off and when it is running idle in addition to the trigger time).

MEMO

MEMO

AFTER SALES SERVICE

■ Please use correctly according to the precautions written on the instruction manual, cordless wrench body, accessories, etc.

■ For more information about after-sales service, please contact the distributor where you purchased the product.

■ When contacting distributor, please report in detail the model, serial number, date of purchase, voltage, and fault conditions.

⚠WARNING

● **Do not use wrench when malfunction, deficiency in wrenches performance, personal injury or property loss is foreseen.**
If possible, prepare backup wrenches beforehand.

TONE TONE CO., LTD.

6-25, KOTOBUKICHO, KAWACHINAGANO-SHI,
OSAKA 586-0026, JAPAN
Web Site: https://www.tonetool.co.jp
e-mail: overseas@tonetool.co.jp

●Specifications and the design are subject to change without notice. ●

IMKA116